REVISIONS				
ZONE	REV	DESCRIPTION	DATE	APPROVED
	A	SUMP OPTION DELETED	22JAN10	

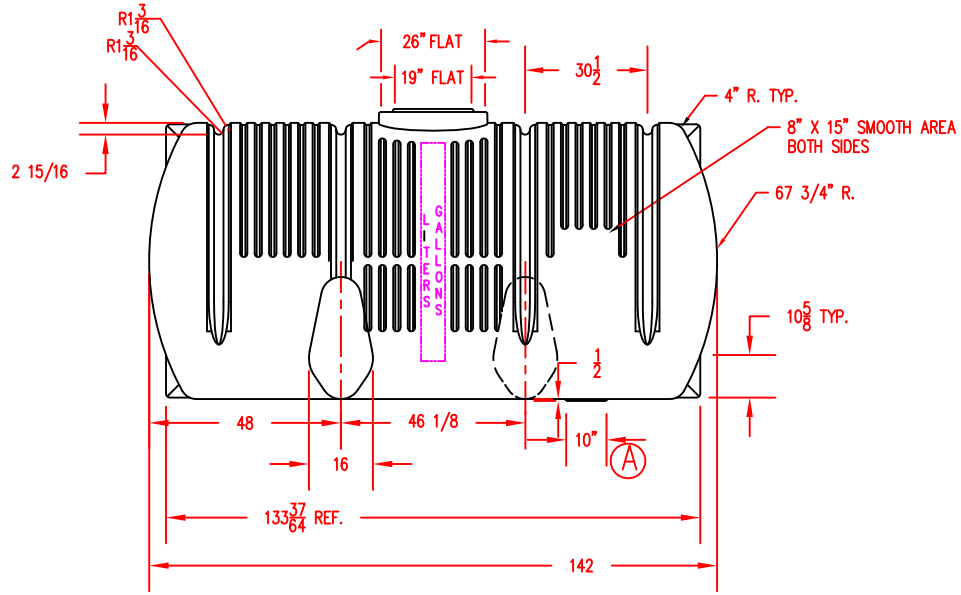

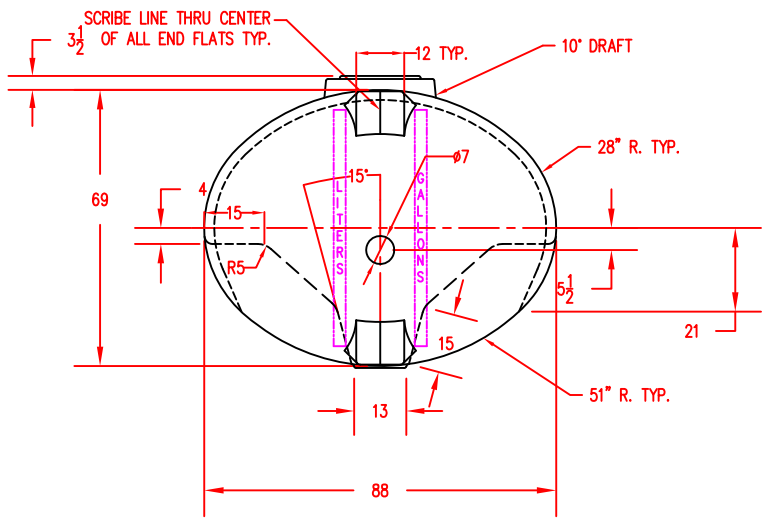

NORWESCO
ST. BONIFACIUS, MN

2550 GALLON ELLIPTICAL TANK

JTP 10JUL01	SIZE A	FSCM NO.	DWG NO.	REV
	SCALE 1/48		SHEET	