REVISIONS				
ZONE	REV	DESCRIPTION	DATE	APPROVED

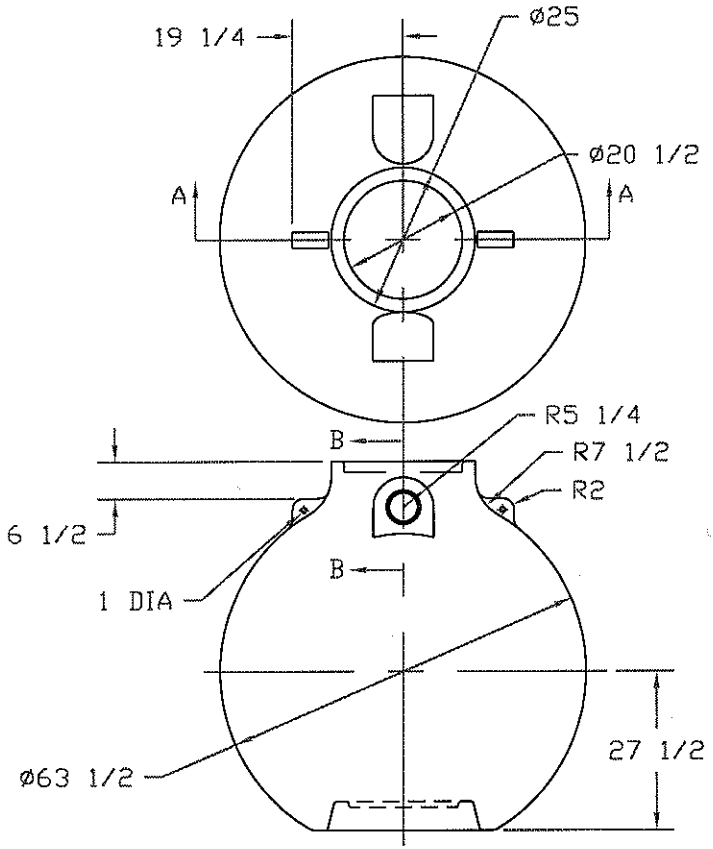

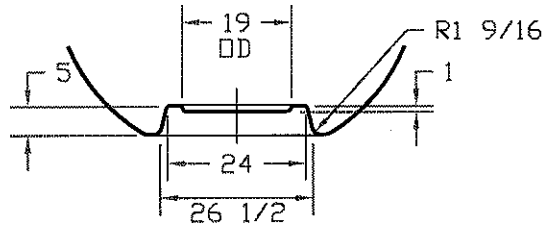

SECTION A-A

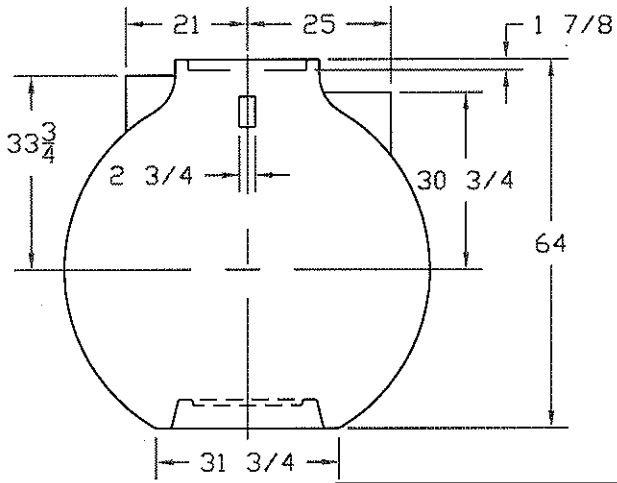

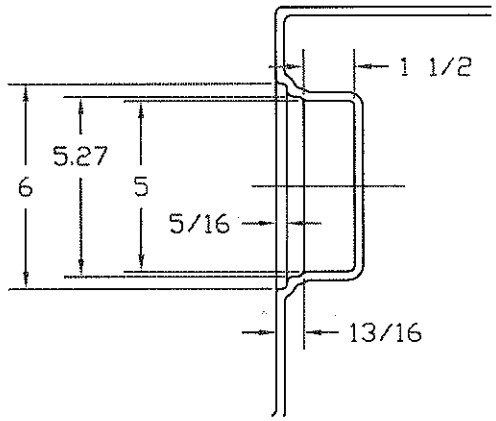

SECTION B-B
1/4 SCALE

NOTE: THIS GASKET RECESS IS AT INLET ONLY. OUTLET IS FLAT.

COLOR: BLACK

NORWESCO
ST. BONIFACIUS, MN

500 GALLON SPHERICAL BELOW GROUND TANK

JTP 02DEC96	SIZE B	FSCM NO.	DWG NO. 40785	REV
	SCALE 1/24		SHEET	