REVISIONS				
ZONE	REV	DESCRIPTION	DATE	APPROVED

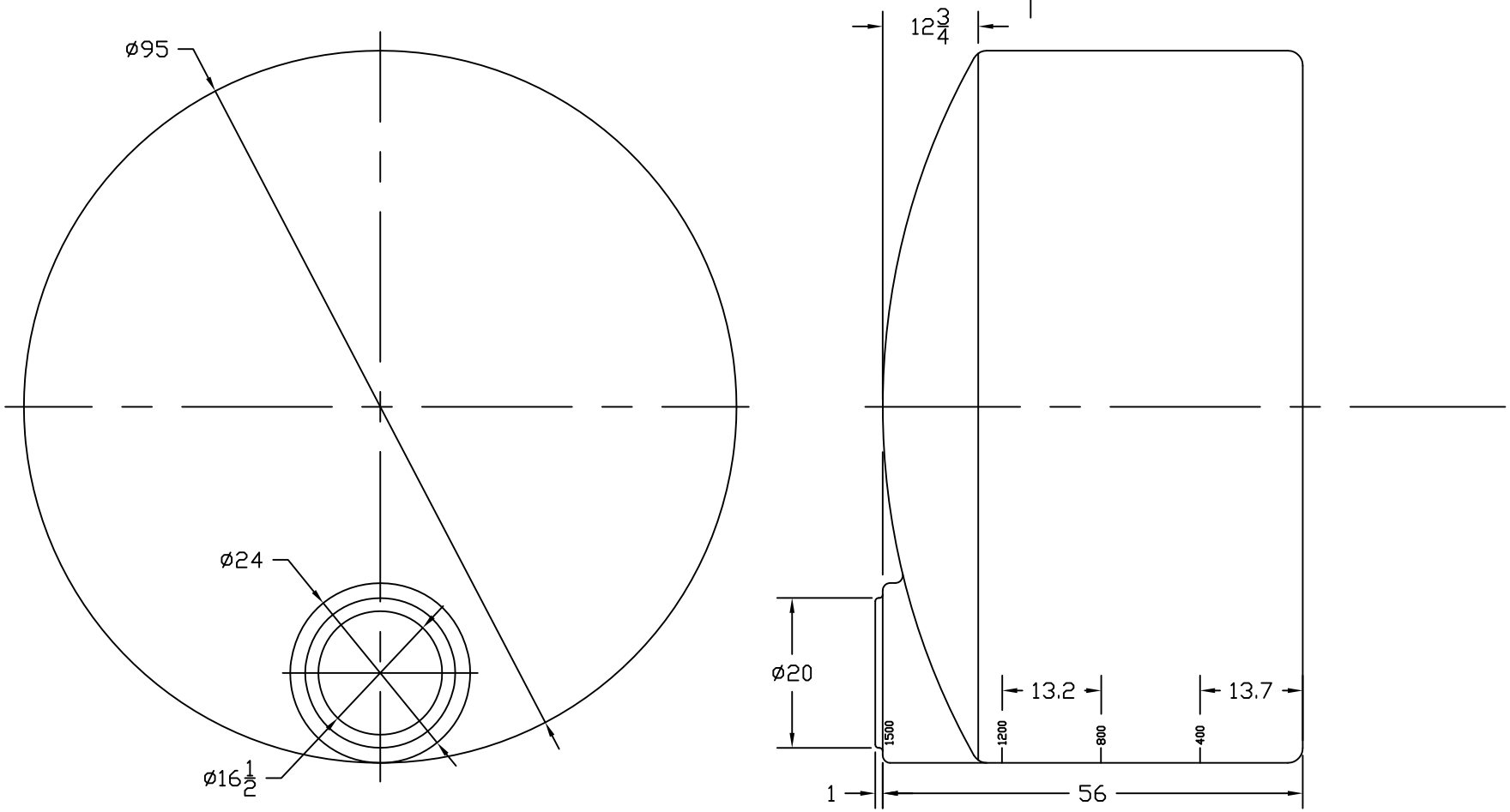

NORWESCO
ST. BONIFACIUS, MN

1500 GALLON VERTICAL WATER TANK X 95 DIA

JTP 13FEB04	SIZE B	FSCM NO.	DWG NO.	REV
	SCALE 1/16		SHEET	